Parts List			
Qty	Part Number	Material	Mass
1	2026-02-11-18-26-40-321	Steel	347.334 g

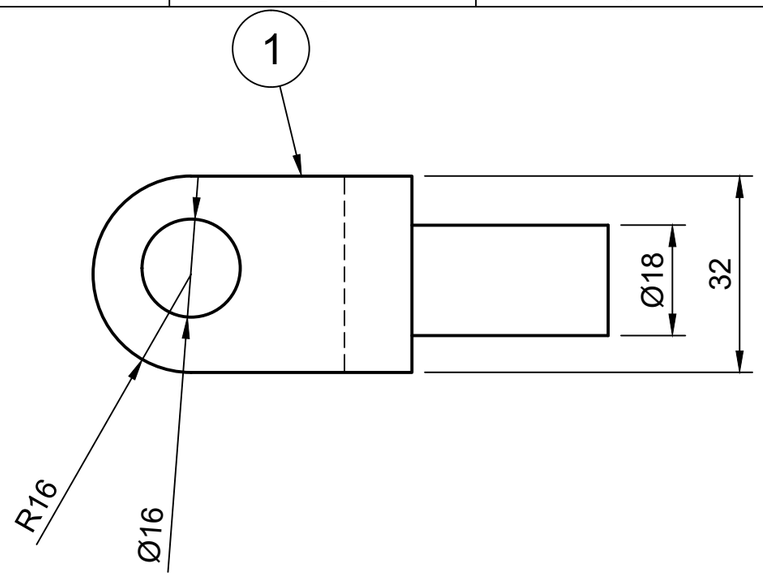

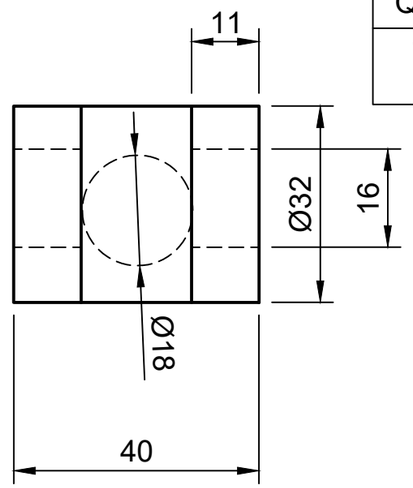

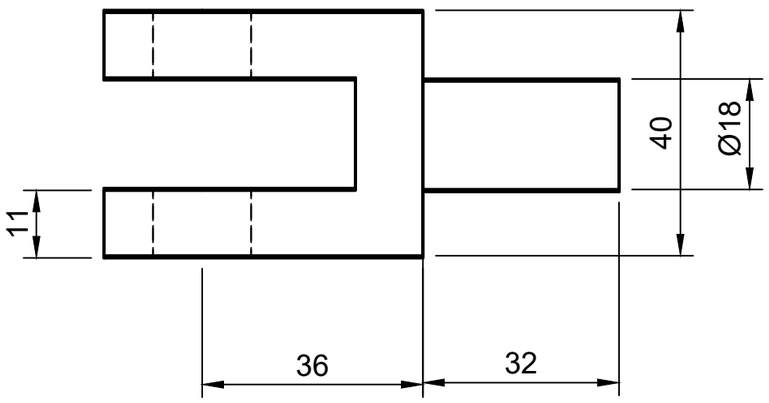

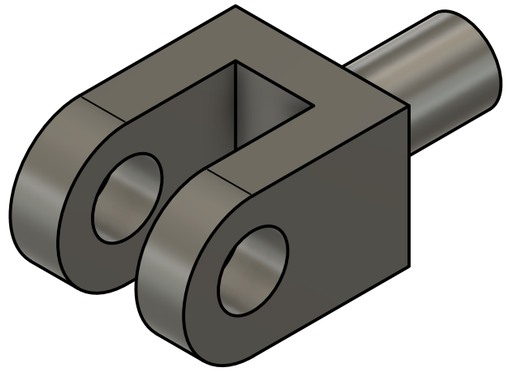

Dept. CSE	Technical reference 212225040230	Created by MEGALA M S	Approved by DR.SARAVANAN M P
		Document type SKETCH	Document status
		Title EX:5:CREATE A 3D SOLID MODEL FROM ORTHOGRAPHIC PROJECTION	DWG No.
			Rev. EN / Date of issue 2/11/2026 / Sheet 1/1